TOA

IP HORN SPEAKER 15W

IP-A1SC15

■DESCRIPTION

The IP-A1SC15 is an IP paging horn speaker to deliver clear announcements via network with 124 dB output capability powered by PoE+ power source. Its rugged enclosure is IP66 rated for outdoor environments.
The IP-A1SC15 supports common network protocols for easy integrations with Video Management Systems and other SIP-compatible VoIP systems and devices. Group paging function is available with 20 Multicast ports for zone paging requirements. Internal sound source file storage allows storing pre-recorded messages or tones which can be played back by 2 control inputs or Remote API (HTTP).

■SPECIFICATIONS

Power Source	PoE+ (IEEE802.3at Class 4), PoE (IEEE802.3af Class 3)
Power Consumption	22 W (at PoE+ powered, rated output) 12.95 W (at PoE powered, rated output) 5 W (IEC62368-1)
Amplifier Rated Output	15 W (at PoE+ powered), 8 W (at PoE powered)
Sensitivity	112 dB (1 W, 1 m) (500 Hz – 2.5 kHz, peak level)
Maximum Sound Pressure level	124 dB (at PoE+ powered, 15 W, 1 m) (500 Hz – 2.5 kHz, peak level) 121 dB (at PoE powered, 8 W, 1 m) (500 Hz – 2.5 kHz, peak level)
Frequency Response	280 Hz – 12.5 kHz
Audio Codec	Opus, PCMU (G.711u), PCMA (G.711a), G.722
Broadcasting Mode	SIP Broadcasting Mode: Opus/PCMU/PCMA/G.722 Multicast Broadcasting Mode: Opus/PCMU/PCMA/G.722 Auto codec recognition, 20 ports VMS Broadcasting Mode: PCMU Internal Message Broadcasting Mode Note: Each broadcast mode can be assigned an order of priority using the Priority Setting function.
Sound Source Files	Max. 20 files (File storage capacity: 80 MB total) Supported file formats: WAV file: 8/16/44.1/48 kHz sampling frequency, 8/16 bit, monaural/stereo MP3 file: 32/44.1/48 kHz sampling frequency, 64 – 320 kbps, CBR/VBR, monaural/stereo Repeat playback: Playcount (1–10 times), Duration (5–3600 sec) or Timer (from Start time to End time) Interval time: 0 – 99 sec, Delay time: 0 – 99 sec Trigger: Control Input or Remote API (HTTP)
Network I/F	100BASE-TX, MDI/MDI-X, RJ-45
Network Protocol	TCP/IP, UDP, HTTP, RTP, RTSP, RTCP, ARP, ICMP, IGMPv3, NTP, SIP (RFC3261)
Control Input	2 channels, no-voltage make contact inputs, open voltage: 5 V DC, short-circuit current: 2 mA or less, removable terminal block (3 pins)
Control Output	1 channel, open collector output, withstand voltage: 30 V DC, control current: 50 mA or less, removable terminal block (3 pins)
Indicator	LAN LINK/ACT (green), STATUS (orange)
Clock Accuracy	±13 seconds per month
Time Adjustment	Manual time setting, Time adjustment by NTP server
Power Outage Protection Period	24 hours (RTC time retention, at 40 °C (104 °F))
Dust/Water Protection	IP66
Language	English/Japanese
Operating Temperature	−30 °C to +55 °C (−22 °F to +131 °F)
Operating Humidity	90 %RH or less (no condensation)
Finish	Horn flare and body: Aluminum, off-white (RAL 9010 equivalent), paint Reflector horn: ABS resin, off-white(RAL 9010 equivalent) Rear cover: PC resin, off-white (RAL 9010 equivalent), paint Bracket, screws and bolts: Stainless steel
Dimensions	222 (W) × 211 (H) × 276 (D) mm (8.74" × 8.31" × 10.87")
Weight	1.4 kg (3.09 lb)
Accessory	Rear cover ···1, Removable terminal plug (3 pins) ···2
Option	Speaker mount bracket: SP-131, SP-201, SP-301 Pole band: YS-60B

Note: Take special care to avoid mounting this speaker directly to structures (such as ski lift towers) that generate large amounts of vibration. Also, do not use this speaker in environments where it may be exposed to oil or other chemicals, as mounting parts could rapidly deteriorate, possibly resulting in personal injury or other accidents due to the speaker falling.

※ ONVIF is a registered trademark of ONVIF Inc.

※ These specifications apply to the firmware version 3.1.0 or later. For the latest specifications and firmware, please refer to the TOA DATA Library (https://www.toa-products.com/international/).

TOA

IP HORN SPEAKER 15W

IP-A1SC15

■SPECIFICATIONS

Personal Computer Requirements

Display	1920 × 1080 resolution or greater
OS	Windows 10 Pro (64-bit edition) Windows 10 Home (64-bit edition) Windows 11 Pro Windows 11 Home
Required Web Browser	Google Chrome Microsoft Edge

※ Windows and Microsoft Edge are registered trademarks of Microsoft Corporation in the United States and other countries.
※ Google Chrome is the trademark of Google LLC in the United States and other countries.
※ Other company names and products are also trademarks of individual companies.

■APPEARANCE

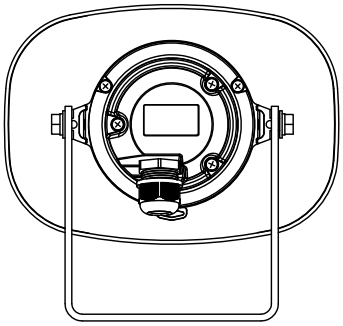

Rear View

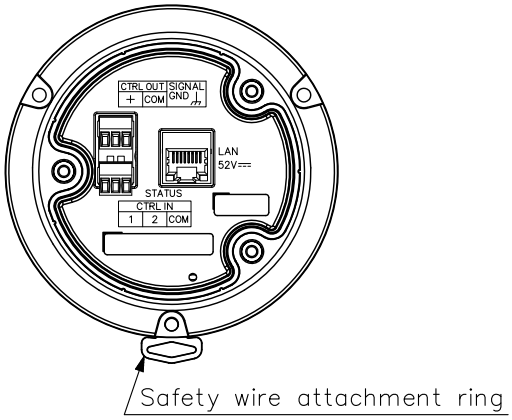

Close-up with rear cover removed

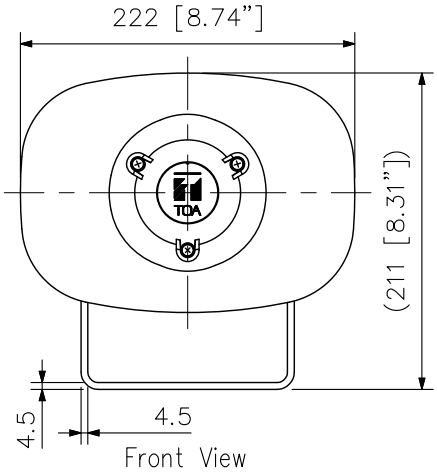

Front View

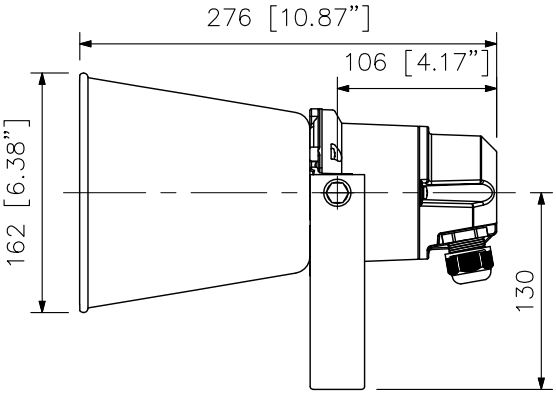

Side View

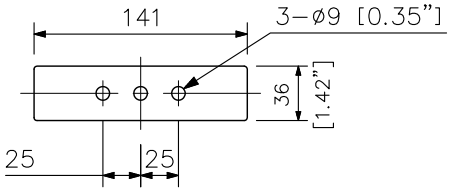

Dimensions of mounting bracket

UNIT: mm SCALE: 1/5

Note: Numerical values in parentheses are for reference only.

TOA Corporation

DWG No: GIP00GC1-2