TOA

HEADSET MICROPHONE EM-370HS-AS

■DESCRIPTION

The EM-370HS-AS is Headset Microphone using electret condenser type microphone, featuring high intelligibility and suitable for speech application.

■SPECIFICATIONS

Microphone Type	Electret Condenser Microphone
Directivity	Unidirectional
Rated Impedance	2.5 kΩ Unbalanced
Sensitivity	−51 dB (1 kHz, 0 dB=1V/Pa)
Frequency Response	50 Hz to 12 kHz
Cable Length	10 meters (10,000 mm)
Connector	1/4" Unbalanced Phone Jack
Finish	Battery case : ABS, Black; Headset : metal black
Dimension	89.5 (W) x 38 (H) x 19 (D) mm (microphone body)
Weight	142 g (without battery)
Battery Power	1 pc x "AA" (R6S or UM-3U)

Notes:

o The design and specifications are subject to change without notice for improvement.

o Please do not use Phantom power supply.

■APPEARANCE

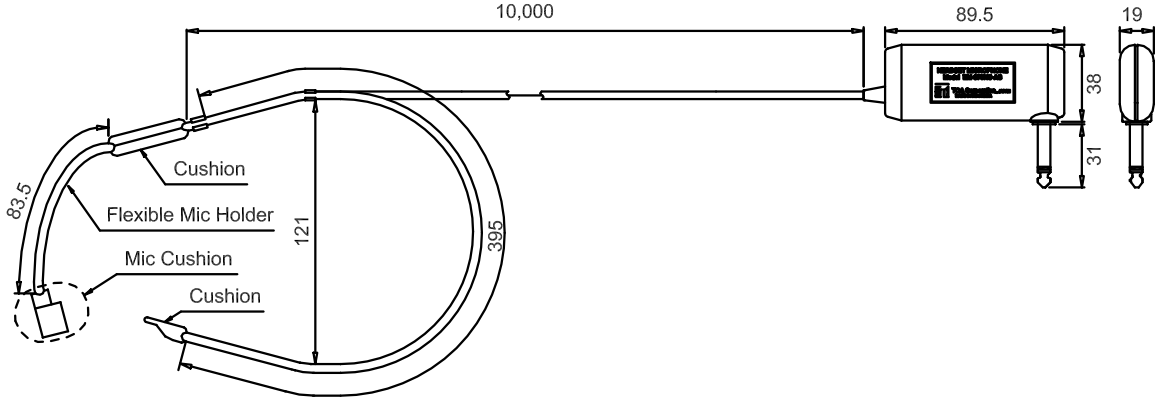

■CIRCUIT DIAGRAM

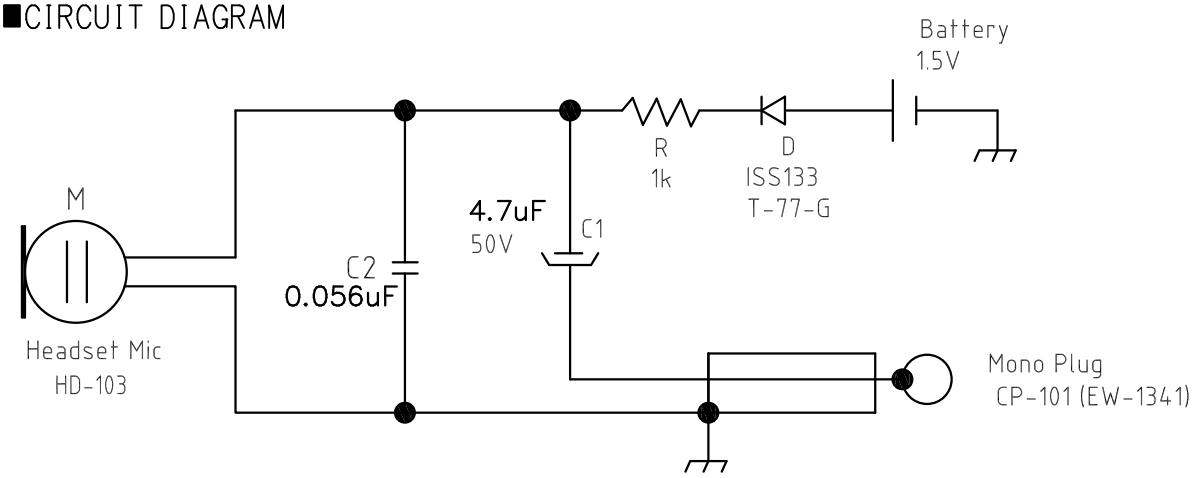

UNIT : mm SCALE : 1/4

DES/02/2014

TOA Corporation

DWG No: 506413028